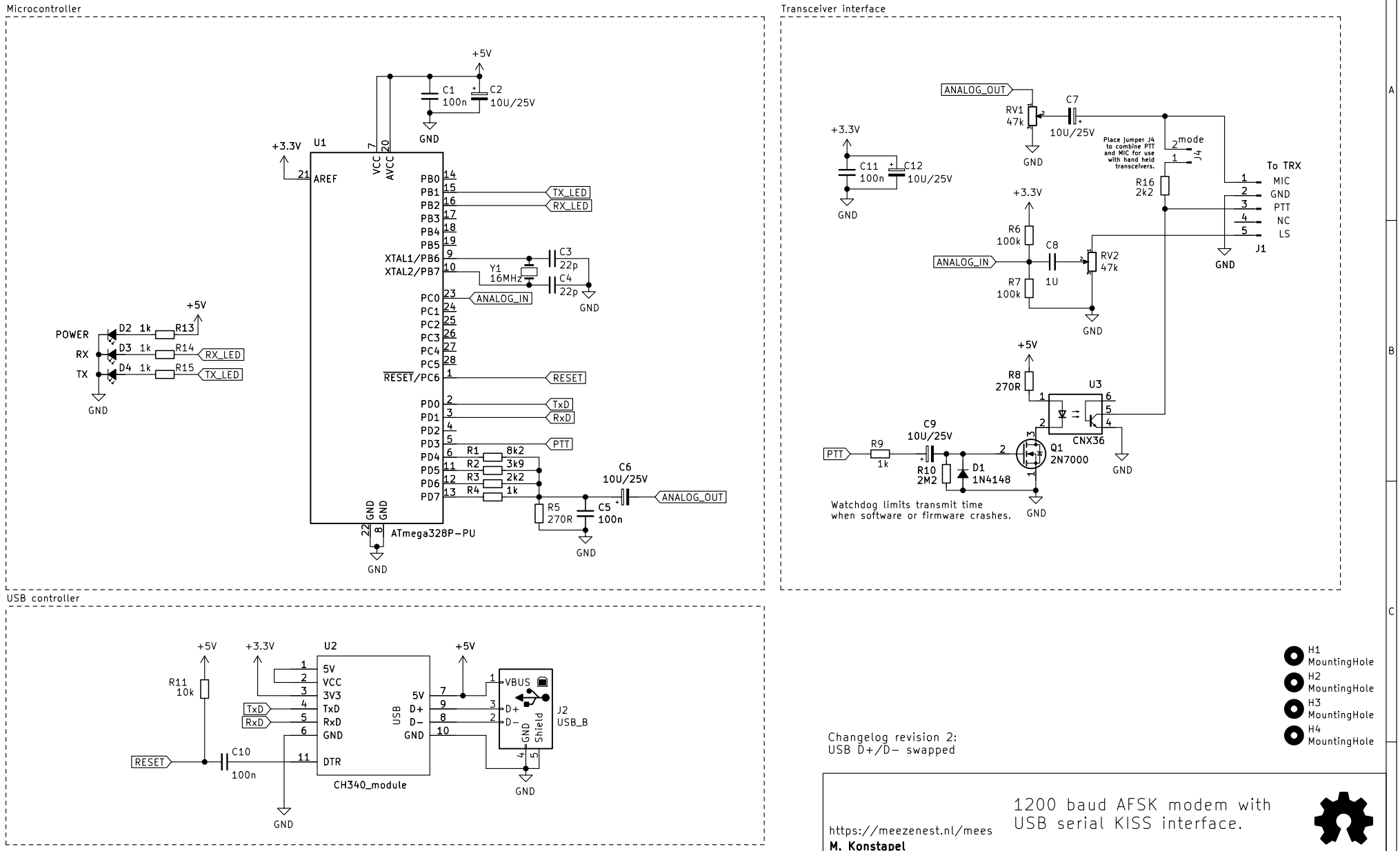
Microcontroller
+5V
C1
100n
C2
10U/25V
GND
+3.3V
U1
AREF
VCC
AVCC
PB0
PB1
PB2
PB3
PB4
PB5
XTAL1/PB6
XTAL2/PB7
PC0
PC1
PC2
PC3
PC4
PC5
RESET/PC6
PD0
PD1
PD2
PD3
PD4
PD5
PD6
PD7
TX_LED
RX_LED
C3
22p
Y1
16MHz
C4
22p
ANALOG_IN
RESET
TxD
RxD
PTT
R1
8k2
R2
3k9
R3
2k2
R4
1k
C6
10U/25V
ANALOG_OUT
R5
270R
C5
100n
ATmega328P-PU
POWER
RX
TX
D2
D3
D4
1k
R13
R14
R15
Transceiver interface
ANALOG_OUT
RV1
47k
C7
10U/25V
C11
100n
C12
10U/25V
Place jumper J4 to combine PTT and MIC for use with hand held transceivers.
mode
J4
To TRX
MIC
GND
PTT
NC
LS
J1
R16
2k2
R6
100k
C8
1U
RV2
47k
ANALOG_IN
R7
100k
R8
270R
U3
CNX36
C9
10U/25V
R9
1k
R10
2M2
D1
1N4148
Q1
2N7000
Watchdog limits transmit time when software or firmware crashes.
USB controller
R11
10k
U2
5V
VCC
3V3
TxD
RxD
GND
DTR
USB
D+
D−
RESET
C10
100n
CH340_module
VBUS
Shield
J2
USB_B
H1
MountingHole
H2
MountingHole
H3
MountingHole
H4
MountingHole
Changelog revision 2:
USB D+/D− swapped
1200 baud AFSK modem with
USB serial KISS interface.
https://meezenest.nl/mees
M. Konstapel
Sheet: /
File: packetmodem_nano2_rev2.sch
Title: Packet modem Nano 2
Size: A4
Date: 2022-01-14
Rev: 1
KiCad E.D.A. kicad 6.0.11
Id: 1/1