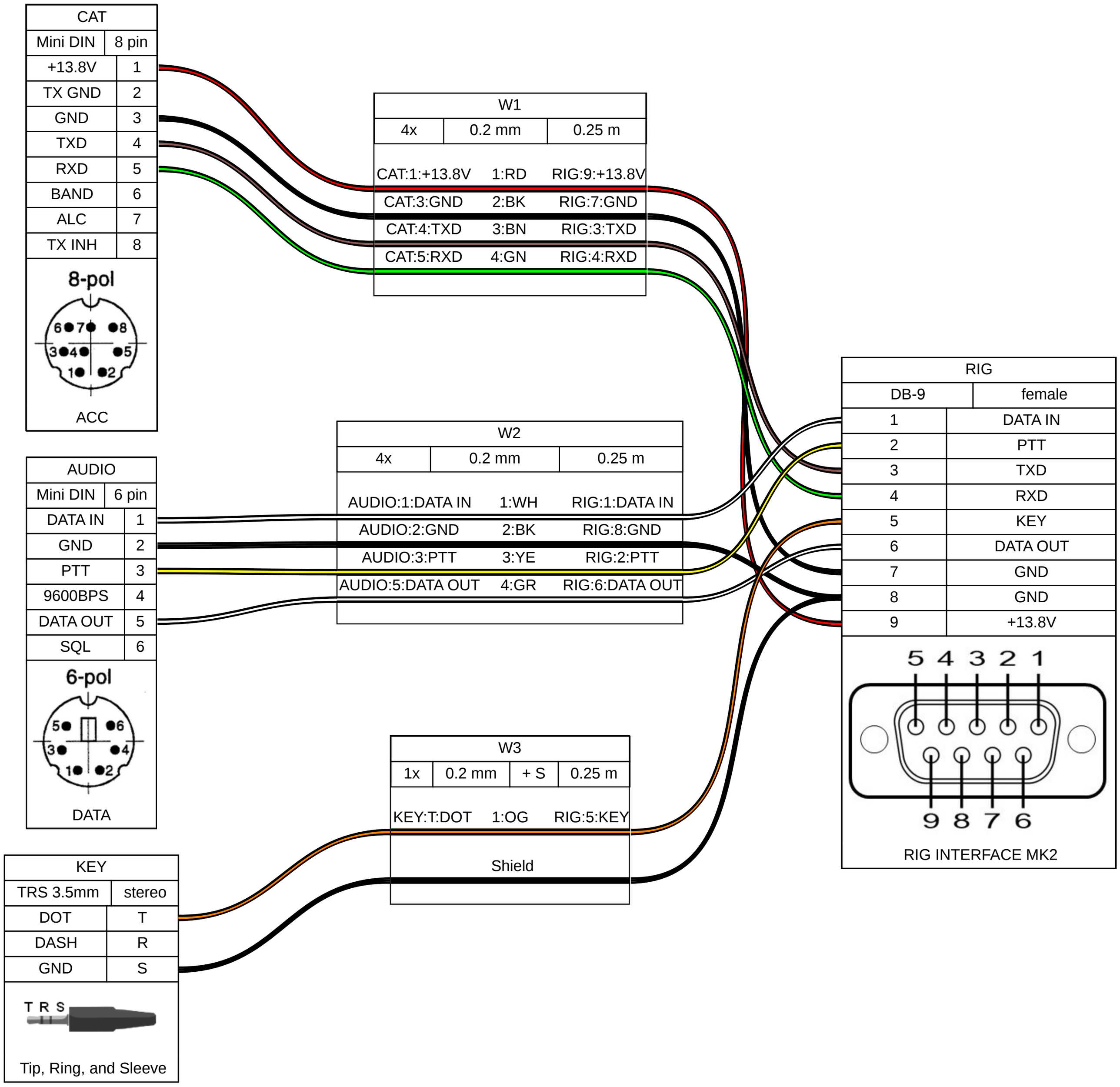
CAT
Mini DIN 8 pin
+13.8V 1
TX GND 2
GND 3
TXD 4
RXD 5
BAND 6
ALC 7
TX INH 8
8-pol
6 7 8
3 4 5
1 2
ACC
W1
4x 0.2 mm 0.25 m
CAT:1:+13.8V 1:RD RIG:9:+13.8V
CAT:3:GND 2:BK RIG:7:GND
CAT:4:TXD 3:BN RIG:3:TXD
CAT:5:RXD 4:GN RIG:4:RXD
RIG
DB-9 female
1 DATA IN
2 PTT
3 TXD
4 RXD
5 KEY
6 DATA OUT
7 GND
8 GND
9 +13.8V
5 4 3 2 1
9 8 7 6
RIG INTERFACE MK2
AUDIO
Mini DIN 6 pin
DATA IN 1
GND 2
PTT 3
9600BPS 4
DATA OUT 5
SQL 6
6-pol
5 6
3 4
1 2
DATA
W2
4x 0.2 mm 0.25 m
AUDIO:1:DATA IN 1:WH RIG:1:DATA IN
AUDIO:2:GND 2:BK RIG:8:GND
AUDIO:3:PTT 3:YE RIG:2:PTT
AUDIO:5:DATA OUT 4:GR RIG:6:DATA OUT
W3
1x 0.2 mm + S 0.25 m
KEY:T:DOT 1:OG RIG:5:KEY
Shield
KEY
TRS 3.5mm stereo
DOT T
DASH R
GND S
T R S
Tip, Ring, and Sleeve