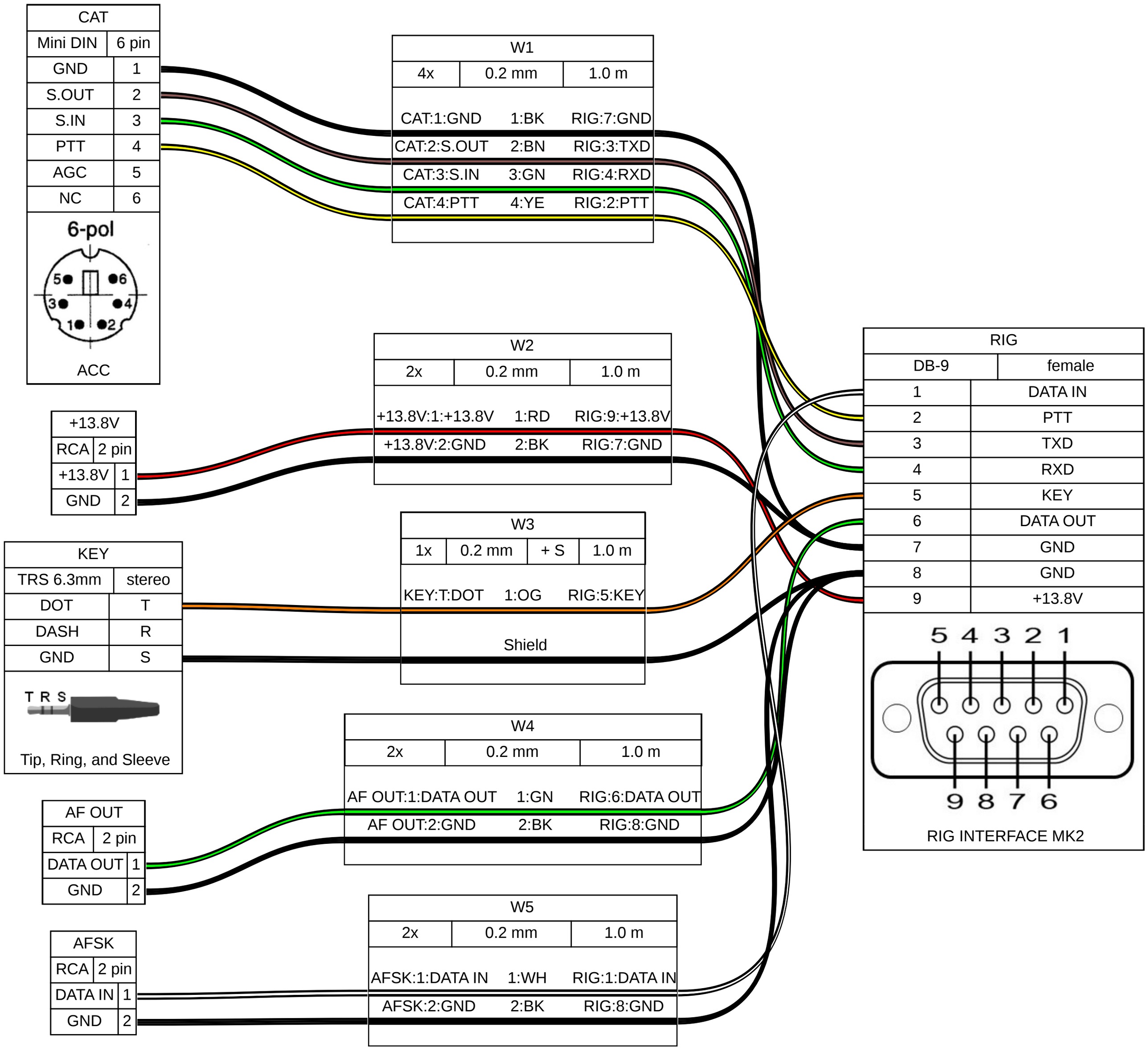
CAT
Mini DIN 6 pin
GND 1
S.OUT 2
S.IN 3
PTT 4
AGC 5
NC 6
6-pol
5 6 3 4 1 2
ACC
W1
4x 0.2 mm 1.0 m
CAT:1:GND 1:BK RIG:7:GND
CAT:2:S.OUT 2:BN RIG:3:TXD
CAT:3:S.IN 3:GN RIG:4:RXD
CAT:4:PTT 4:YE RIG:2:PTT
W2
2x 0.2 mm 1.0 m
+13.8V:1:+13.8V 1:RD RIG:9:+13.8V
+13.8V:2:GND 2:BK RIG:7:GND
+13.8V
RCA 2 pin
+13.8V 1
GND 2
W3
1x 0.2 mm + S 1.0 m
KEY:T:DOT 1:OG RIG:5:KEY
Shield
KEY
TRS 6.3mm stereo
DOT T
DASH R
GND S
T R S
Tip, Ring, and Sleeve
W4
2x 0.2 mm 1.0 m
AF OUT:1:DATA OUT 1:GN RIG:6:DATA OUT
AF OUT:2:GND 2:BK RIG:8:GND
AF OUT
RCA 2 pin
DATA OUT 1
GND 2
W5
2x 0.2 mm 1.0 m
AFSK:1:DATA IN 1:WH RIG:1:DATA IN
AFSK:2:GND 2:BK RIG:8:GND
AFSK
RCA 2 pin
DATA IN 1
GND 2
RIG
DB-9 female
1 DATA IN
2 PTT
3 TXD
4 RXD
5 KEY
6 DATA OUT
7 GND
8 GND
9 +13.8V
5 4 3 2 1
9 8 7 6
RIG INTERFACE MK2